Surname	Centre Number	Candidate Number
Other Names		0

GCSE

3420UB0-1

S19-3420UB0-1

WEDNESDAY, 22 MAY 2019 – AFTERNOON

PHYSICS – Unit 2:
Forces, Space and Radioactivity

HIGHER TIER

1 hour 45 minutes

For Examiner's use only		
Question	**Maximum Mark**	**Mark Awarded**
1.	**13**	
2.	**7**	
3.	**6**	
4.	**15**	
5.	**12**	
6.	**14**	
7.	**13**	
Total	**80**	

3420UB01
01

ADDITIONAL MATERIALS

In addition to this paper you will require a calculator and a ruler.

INSTRUCTIONS TO CANDIDATES

Use black ink or black ball-point pen. Do not use gel pen. Do not use correction fluid.

Write your name, centre number and candidate number in the spaces at the top of this page.

Answer **all** questions.

Write your answers in the spaces provided in this booklet. If you run out of space use the additional page at the back of the booklet.

INFORMATION FOR CANDIDATES

The number of marks is given in brackets at the end of each question or part-question.

The assessment of the quality of extended response (QER) will take place in question **3**.

MAY193420UB0101

© WJEC CBAC Ltd.

Equations

speed = $\frac{\text{distance}}{\text{time}}$	
acceleration [or deceleration] = $\frac{\text{change in velocity}}{\text{time}}$	$a = \frac{\Delta v}{t}$
acceleration = gradient of a velocity-time graph	
distance travelled = area under a velocity-time graph	
resultant force = mass × acceleration	$F = ma$
weight = mass × gravitational field strength	$W = mg$
work = force × distance	$W = Fd$
kinetic energy = $\frac{\text{mass} \times \text{velocity}^2}{2}$	$\text{KE} = \frac{1}{2}mv^2$
change in potential energy = mass × gravitational field strength × change in height	$\text{PE} = mgh$
force = spring constant × extension	$F = kx$
work done in stretching = area under a force-extension graph	$W = \frac{1}{2}Fx$
momentum = mass × velocity	$p = mv$
force = $\frac{\text{change in momentum}}{\text{time}}$	$F = \frac{\Delta p}{t}$
u = initial velocity v = final velocity t = time a = acceleration x = displacement	$v = u + at$ $x = \frac{u + v}{2}t$ $x = ut + \frac{1}{2}at^2$ $v^2 = u^2 + 2ax$
moment = force × distance	$M = Fd$

SI multipliers

Prefix	Multiplier
p	1×10^{-12}
n	1×10^{-9}
μ	1×10^{-6}
m	1×10^{-3}

Prefix	Multiplier
k	1×10^{3}
M	1×10^{6}
G	1×10^{9}
T	1×10^{12}

© WJEC CBAC Ltd.

BLANK PAGE

PLEASE DO NOT WRITE ON THIS PAGE

© WJEC CBAC Ltd.

Examiner only

Answer **all** *questions.*

1. The overall stopping distance of a car is made up of two parts:

- the distance that the car travels when the driver is reacting (thinking distance)
- the distance that the car travels after the brakes have been applied (braking distance).

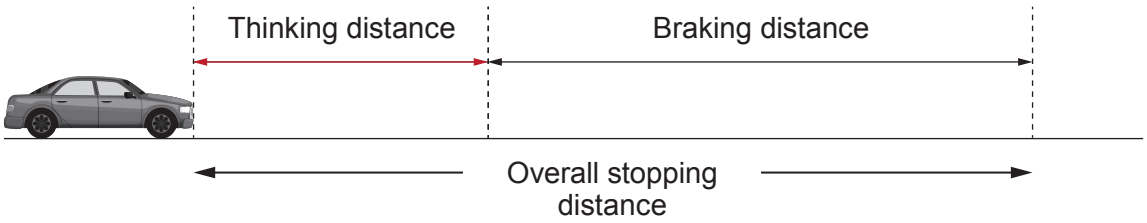

The graph below shows how the thinking distance and braking distance depend on the speed of a vehicle under good conditions.

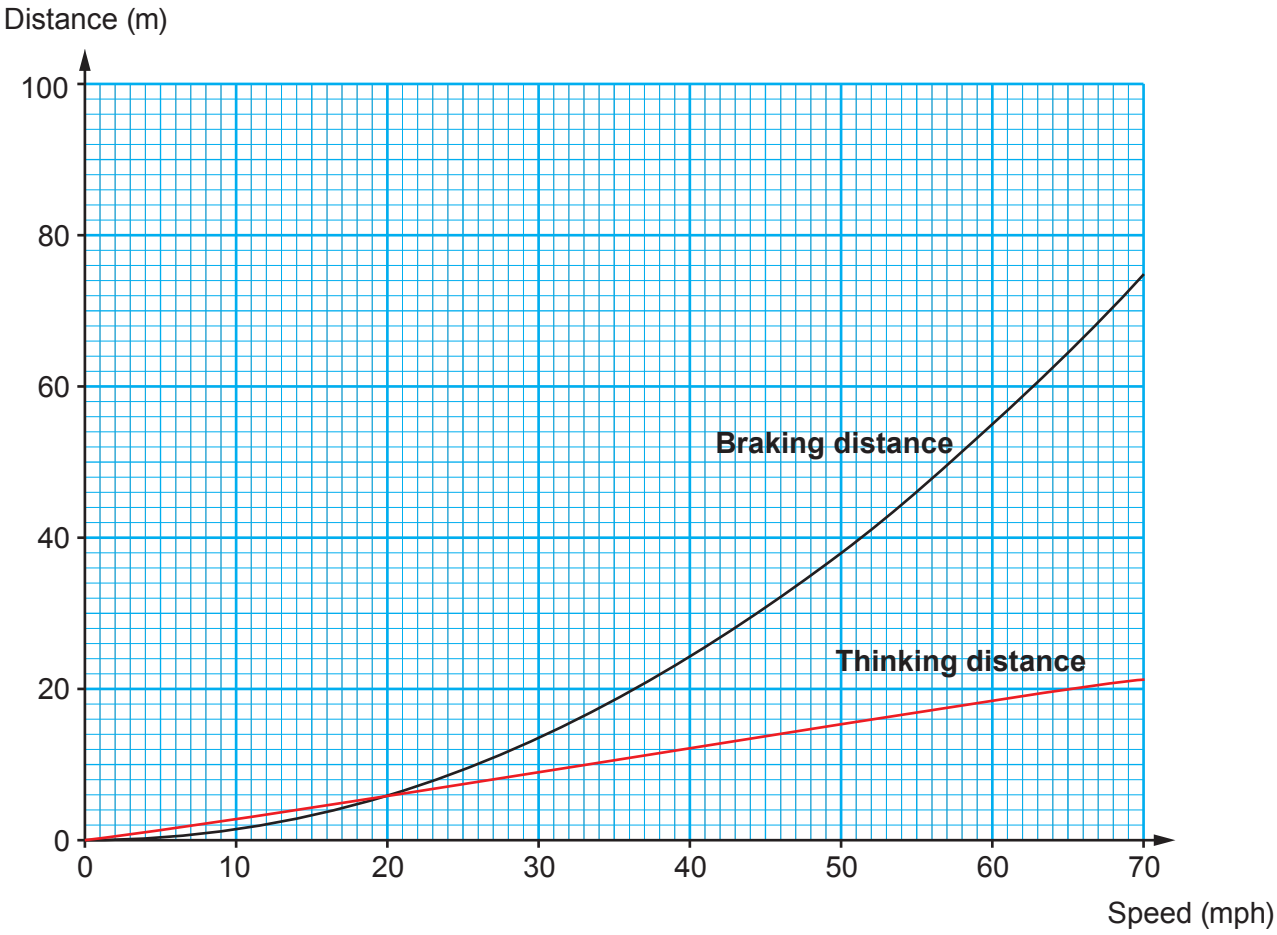

The table below shows the conversion from mph into m/s.

Speed (mph)	20	40	60	70
Speed (m/s)	9	18	27	31

© WJEC CBAC Ltd.

Examiner only

(a) (i) It is suggested that both thinking distance and braking distance are directly proportional to speed. Explain whether this suggestion is true. [2]

.....

.....

.....

.....

(ii) Use information on page 4 and the equation:

$$\text{time} = \frac{\text{distance}}{\text{speed}}$$

to calculate the **thinking** time of the driver when travelling at 40 mph. [3]

Thinking time = ... s

(iii) Use the information on the graph to complete the table below. [2]

Speed (mph)	0	20	30	40	60	70
Overall stopping distance (m)	.....	.....	.....	.....	.....	.....

(iv) Use the data in the table to **plot** the points on the grid opposite **and draw a line** to show how the overall stopping distance depends on speed. [3]

3420UB01 05

© WJEC CBAC Ltd.

Examiner only

(b) The speed limit along a road outside a school in Cardiff was 30 mph. The council decided to reduce this to 20 mph in 2017.

The entrance to the school is situated 15 m after a bend in the road.

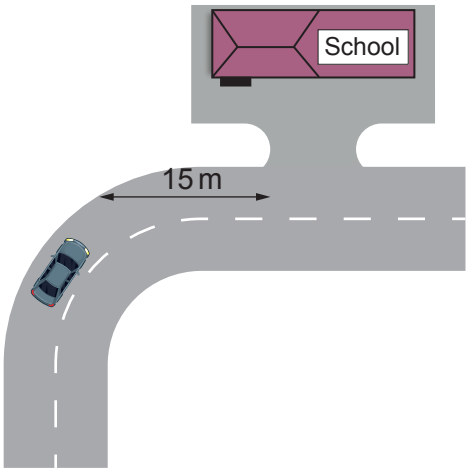

Explain how the change in speed limit affects the chance of children getting knocked down as they cross the road outside the school entrance. Use data to support your answer. [3]

.....

.....

.....

.....

.....

.....

13

© WJEC CBAC Ltd.

Examiner only

2. Radiotherapy is used to treat cancer. Three types of radiotherapy are described below.

Brachytherapy is a type of internal radiotherapy. It involves putting a sealed radiation source inside the cancerous growth. The radioisotope used emits low energy gamma rays. An isotope of iodine (iodine-125) can be used to treat prostate cancer.

Unsealed source radiotherapy also uses radioactive substances to treat cancer. These are introduced into the body by injection or ingestion. Iodine-131 is injected into a patient to treat thyroid cancer.

External radiotherapy is different from the methods described above. It is given as a series of short, daily treatments in the radiotherapy department using high energy gamma rays.

Information about some isotopes of iodine is given below.

Iodine-123 has a half-life of 13 hours and emits gamma.
Iodine-125 has a half-life of 59 days and emits gamma.
Iodine-128 has a half-life of 25 minutes and emits beta.
Iodine-129 has a half-life of 15 000 000 years and emits beta and gamma.
Iodine-131 has a half-life of 8 days and emits beta and gamma.

(a) Explain why iodine-123 is unsuitable to treat prostate cancer. [2]

.....

.....

.....

(b) Explain why iodine-131 is more suitable to treat thyroid cancer than iodine-128. [2]

.....

.....

.....

(c) Patients are told that, after treatment with iodine-131, small amounts of radiation from their body may trigger radiation monitors until the activity has dropped to one thousandth $\left(\frac{1}{1000}\right)$ of its initial value. The patients are told this will occur 80 days after treatment. Explain with the aid of a calculation whether 80 days is long enough. [3]

.....

.....

.....

.....

.....

.....

3420UB01 07

7

© WJEC CBAC Ltd.

Examiner only

3. Explain how cosmic microwave background radiation (CMBR) **and** cosmological red shift provide evidence for the origin of the Universe. [6 QER]

.....

.....

.....

.....

.....

.....

.....

.....

.....

.....

.....

.....

.....

.....

.....

6

© WJEC CBAC Ltd.

Examiner only

4. A group of students investigate how the terminal speed of falling paper cake cases depends on their mass. They use the apparatus shown in the diagram below.

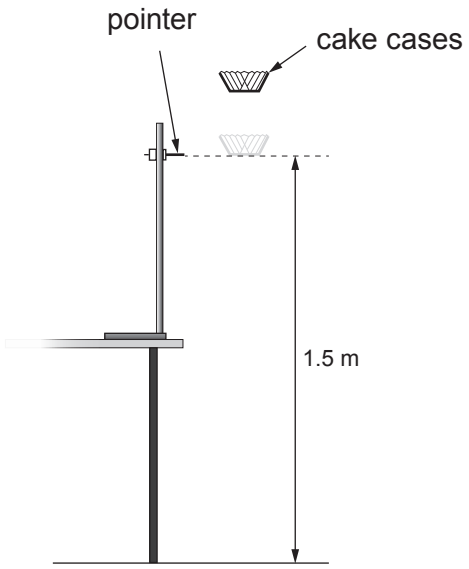

The cake cases are dropped from at least 20 cm above the pointer. This allows them to reach a terminal speed by the time they reach the pointer. The time taken for the cases to fall the distance of 1.5 m between the pointer and the floor is measured.

The students are given a blank table to record their results. This is shown below.

Number of cake cases	Mass of cake cases (g)	Time taken for paper case cases to fall (s)						Terminal speed (m/s)
		Trial 1	Trial 2	Trial 3	Trial 4	Trial 5	Mean	
1								
2								
3								
4								
5								

(a) (i) The same cake cases are used throughout the experiment. State the other controlled **variables** in the experiment. [1]

.....

.....

3420UB01 09

© WJEC CBAC Ltd.

Examiner only

(ii) Explain the advantage of 5 trial timings for each number of cases. [2]

.....

.....

.....

(iii) The students are told the mean mass of a paper case. Explain how the quality of results collected is affected if the cases used each time are weighed rather than calculated by using the mean mass of a case. [2]

.....

.....

.....

.....

(b) (i) Explain, in terms of forces, how the cake cases reach a terminal speed. [2]

.....

.....

.....

.....

(ii) Describe how the experiment could be extended to check that the cases are falling with a terminal speed over the 1.5 m shown. [2]

.....

.....

.....

.....

© WJEC CBAC Ltd.

Examiner only

(c) The cake cases used are supplied in a box containing 250 cases. The combined mass of the box **and** cases is 118 g. The mass of the empty box is 18 g. The terminal speed of 4 paper cases is found to be 2.54 m/s.
The weight of a 1 kg mass on Earth is 10 N.

Use equations from page 2 to calculate:

(i) the time taken for the 4 paper cases to fall the 1.5 m shown in the diagram on page 9. [2]

Time = ... s

(ii) the air resistance acting on 4 paper cases when they fall at terminal speed.
Show your working. [4]

Air resistance = ... N

15

© WJEC CBAC Ltd.

5. The Hertzsprung-Russell (H-R) diagram below is a means of displaying the properties of stars and representing their evolutionary paths.

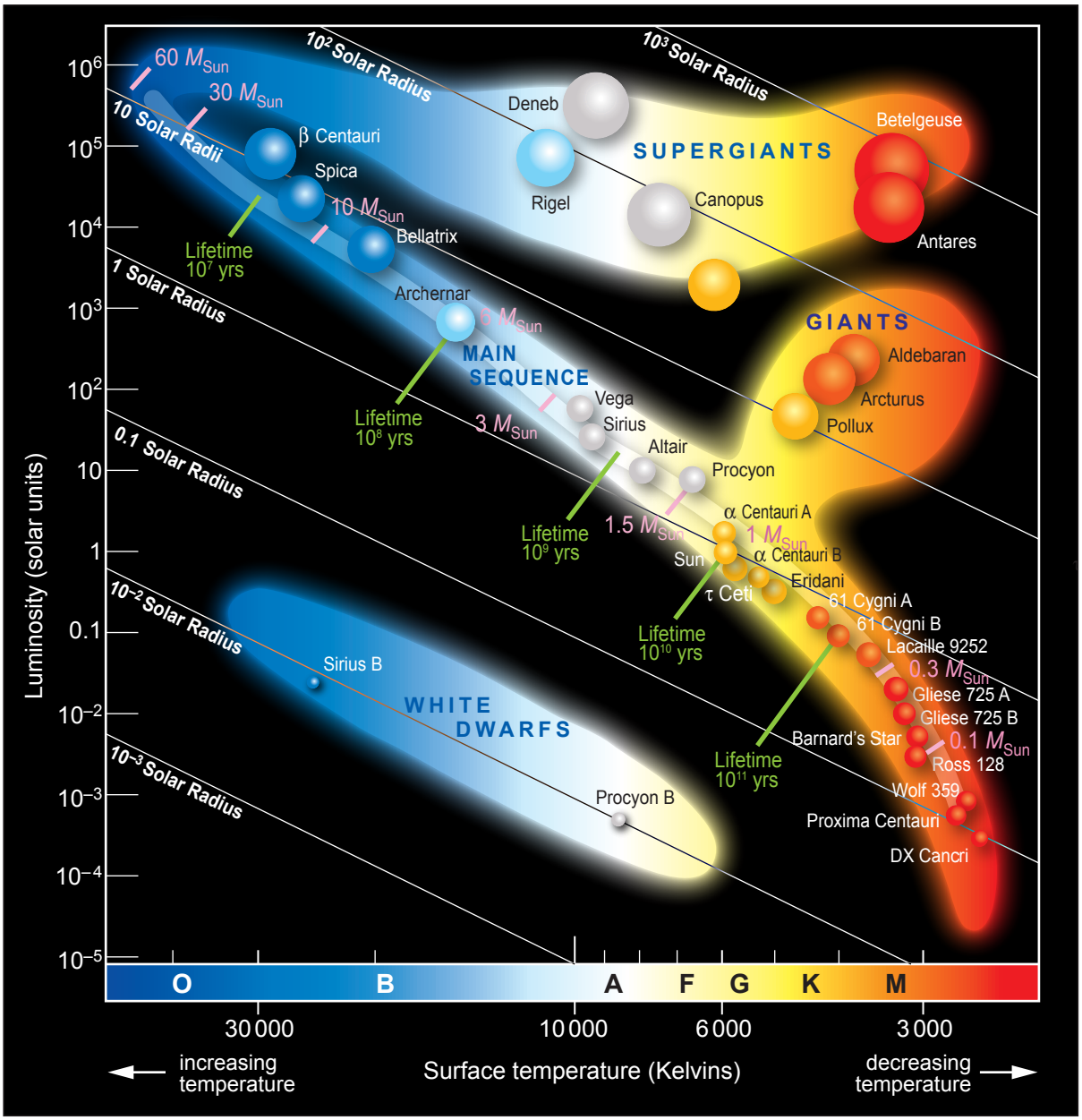

© WJEC CBAC Ltd.

Examiner only

(a) Tick (✓) the boxes next to the **three** correct statements about the stars shown in the H-R diagram. [3]

- The larger the mass of a main sequence star the longer its lifetime. ☐
- The largest supergiant is Betelgeuse. ☐
- The radius of a white dwarf is approximately 100 times smaller than the radius of the Sun. ☐
- The hottest star is β Centauri. ☐
- Centauri A is big enough to become a supergiant. ☐
- The redder a star the hotter it is. ☐

(b) (i) It is claimed that, as our Sun leaves the main sequence, its surface temperature will increase in the next stage of its life and then decrease as it enters the last stage of its life. Explain whether you agree with this statement. You should include data in your answer. [3]

.....

.....

.....

.....

.....

(ii) Explain, in terms of named forces, the changes our Sun will undergo as it leaves the main sequence until it reaches the end of its life. [3]

.....

.....

.....

.....

.....

© WJEC CBAC Ltd.

Examiner only

(c) Explain how the life cycle of stars contributed to the origin of our Solar System. [3]

.....

.....

.....

.....

.....

12

© WJEC CBAC Ltd.

BLANK PAGE

PLEASE DO NOT WRITE ON THIS PAGE

© WJEC CBAC Ltd.

Examiner only

6. Nuclear decay in a fission reactor leads to the production of vast amounts of electrical power. The reactor has design features so there is sustained and controlled fission of uranium.

(a) Explain how the reactor is designed so that fission is sustained and controlled. [4]

.....

.....

.....

.....

.....

.....

(b) A common pair of fission fragments from uranium-235 fission is xenon (Xe) and strontium (Sr). The nuclear equation for the reaction is shown below.

$$^{1}_{0}\mathrm{n} + ^{235}_{92}\mathrm{U} \rightarrow ^{140}_{54}\mathrm{Xe} + ^{94}_{38}\mathrm{Sr} + \ldots\ldots\ldots\ldots\ldots$$

(i) **Complete** the equation. [2]

(ii) Explain why a nucleus of uranium-235 undergoes fission when it absorbs a neutron. [2]

.....

.....

.....

(c) One product of the fission of uranium is strontium-94. Strontium-94 undergoes beta decay with a half-life of 75 s into an isotope of yttrium (Y). Yttrium also undergoes beta decay and its half-life is 19 minutes. Its product is a stable isotope of zirconium.

(i) Write a balanced nuclear equation for the decay of strontium-94 into yttrium. [2]

.....

(ii) Explain what is meant by the statement *strontium-94 has a half-life of 75 s*. [2]

.....

.....

.....

© WJEC CBAC Ltd.

Examiner only

(iii) Explain whether long-term safety precautions are required for the disposal of the waste product strontium-94. [2]

.....

.....

.....

14

© WJEC CBAC Ltd.

Examiner only

7. The velocity of a bullet can be determined by firing it into a suspended wooden block. As the bullet enters the block it will cause it to swing through a height, h. This is shown in the diagram below.

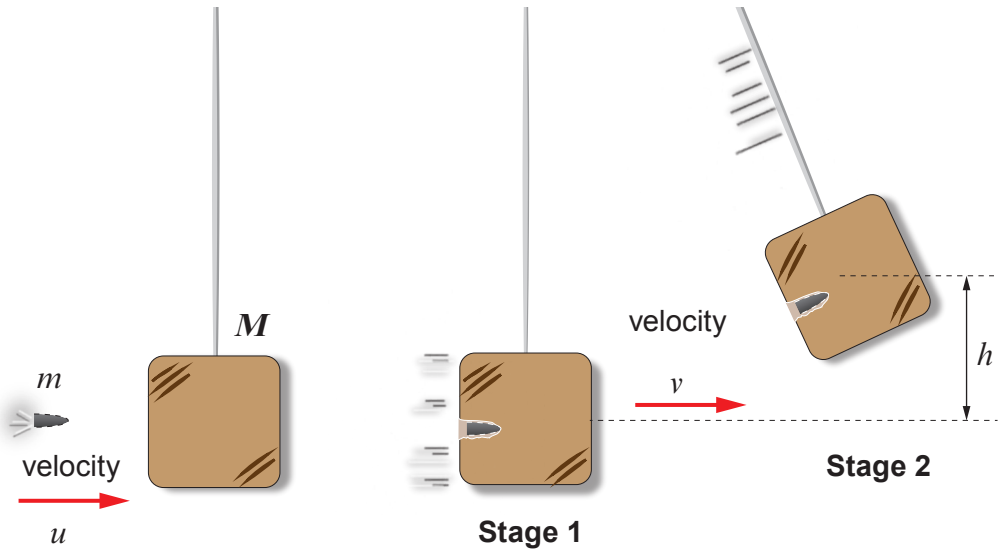

(a) (i) State the law of conservation of momentum. [2]

.....

.....

.....

.....

(ii) Explain whether this law applies to the block as it swings up. [1]

.....

.....

(b) Discuss whether kinetic energy is conserved in **both** stages of the process. [2]

.....

.....

.....

© WJEC CBAC Ltd.

Examiner only

(c) The mass of a bullet is 16 g. It is fired at a velocity, u into a stationary wooden block of mass 2.5 kg. The combined bullet and block start to move with a velocity, v. The block swings through a height, h, equal to 11.9 cm before it comes to rest again.

Use the information above and equations from page 2 to answer the following questions. (g = 10 m/s^2)

(i) Calculate the velocity, v. [4]

Velocity, v = ... m/s

(ii) Use your answer in part (i) to calculate the velocity, u, of the bullet. [4]

Velocity, u = ... m/s

13

END OF PAPER

© WJEC CBAC Ltd.

Question number	Additional page, if required. Write the question number(s) in the left-hand margin.	Examiner only

© WJEC CBAC Ltd.